1Way Cassette

1 Specifications

2 Capacity Table

3 Dimensional Drawing

4 Electrical Wiring Diagram

5 Sound Pressure Level

6 Sound Power Level

7 Temperature and air flow distribution

1 Specifications

1Way Cassette

Type				1Way Cassette	1Way Cassette	1Way Cassette
Model				AM017HN1DEH/EU	AM022FN1DEH/EU	AM022HN1DEH/EU
Power Supply			Ø, #, V, Hz	1,2,220-240,50	1,2,220-240,50	1,2,220-240,50
Mode			-	HP/HR	HP/HR	HP/HR
Performance	Capacity (Nominal)	Cooling	kW	1.70	2.20	2.20
			Btu/h	5,800	7,500	7,500
		Heating	kW	1.90	2.50	2.50
			Btu/h	6,500	8,500	8,500
Power	Power Input (Nominal)	Cooling	W	24.00	0.40	25.00
		Heating		24.00	0.40	25.00
	Current Input (Nominal)	Cooling	A	0.14	0.20	0.15
		Heating		0.14	0.20	0.15
Fan	Motor	Type	-	Crossflow Fan	Crossflow Fan	Crossflow Fan
		Output x n	w	27 x 1	17 x 1	27 x 1
	Air Flow Rate	H/M/L (UL)	CMM	4.80 / 4.30 / 4.10	6.00 / 5.00 / 4.00	5.10 / 4.60 / 4.30
			l/s	80.00 / 71.67 / 68.33	100.00 / 83.33 / 66.67	85.00 / 76.67 / 71.67
	External Pressure	Min/Std/Max	mmAq	-	-	-
			Pa	-	-	-
Piping Connections	Liquid Pipe		Ø, mm	6.35	6.35	6.35
			Ø, inch	1/4"	1/4"	1/4"
	Gas Pipe		Ø, mm	12.70	12.70	12.70
			Ø, inch	1/2"	1/2"	1/2"
	Drain Pipe		Ø, mm	VP20 (OD 26,ID 20)	VP20 (OD 26,ID 20)	VP20 (OD 26,ID 20)
Field Wiring	Power Source Wire		mm²	1.5 - 2.5	1.5 - 2.5	1.5 - 2.5
	Transmission Cable		mm²	0.75 - 1.50	0.75 - 1.50	0.75 - 1.50
Refrigerant	Type		-	R410A	R410A	R410A
	Control Method		-	EEV(O)	EEV(O)	EEV(O)
Sound	Pressure	High / Mid / Low	dB(A)	27 / 24 / 21	27 / 25 / 23	27 / 25 / 23
	Power	Cooling		43	45	46
Dimension	Net Weight		kg	8.0	10.5	8.0
	Shipping Weight		kg	10.8	13.0	10.8
	Net Dimensions (WxHxD)		mm	740 x 135 x 360	970 x 135 x 410	740 x 135 x 360
	Shipping Dimensions (WxHxD)		mm	895 x 223 x 435	1,164 x 212 x 478	895 x 223 x 435
Panel Size	Panel model		-	PC1MWSKAN	PC1NUSMAN	PC1MWSKAN
	Panel Net Weight		kg	2.6	3.1	2.6
	Shipping Weight		kg	4.2	6.4	4.2
	Net Dimensions (WxHxD)		mm	900 x 25 x 420	1,198 x 25 x 500	900 x 25 x 420
	Shipping Dimensions (WxHxD)		mm	958 x 112 x 482	1,262 x 144 x 542	958 x 112 x 482
Additional Accessories	Drain Pump	Drain Pump	- / Model	-	-	-
		Max. lifting Height / Displacement	mm/liter/h	-	-	-
	Air Filter		-	-	-	-

* Specifications may be subject to change without prior notice for product improvement.
* Mode
  - HP : Heat Pump, HR : Heat Recovery
* Nominal cooling capacities are based on;
  - Indoor temperature : 27°C DB, 19°C WB
  - Outdoor temperature : 35°C DB, 24°C WB, Equivalent refrigerant piping : 7.5m, Level differences : 0m
* Nominal heating capacities are based on;
  - Indoor temperature : 20°C DB, 15°C WB
  - Outdoor temperature : 7°C DB, 6°C WB, Equivalent refrigerant piping : 7.5m, Level differences : 0m
* Sound pressure was acquired in an anechoic room. Thus actual noise level may be different depending on the installation conditions.
* These products contain R410A which is fluorinated greenhouse gas.
* Heat Exchanger type : Fin & Tube (Fin : Al, Tube : Cu)

1 Specifications

1Way Cassette

Type				1Way Cassette	1Way Cassette
Model				AM028FN1DEH/EU	AM036FN1DEH/EU
Power Supply			Ø, #, V, Hz	1,2,220-240,50	1,2,220-240,50
Mode			-	HP/HR	HP/HR
Performance	Capacity (Nominal)	Cooling	kW	2.80	3.60
			Btu/h	9,600	12,300
		Heating	kW	3.20	4.00
			Btu/h	10,900	13,600
Power	Power Input (Nominal)	Cooling	W	45.00	50.00
		Heating		45.00	50.00
	Current Input (Nominal)	Cooling	A	0.23	0.25
		Heating		0.23	0.25
Fan	Motor	Type	-	Crossflow Fan	Crossflow Fan
		Output x n	w	17 x 1	17 x 1
	Air Flow Rate	H/M/L (UL)	CMM	7.00 / 6.00 / 5.00	8.00 / 7.00 / 6.00
			l/s	116.67 / 100.00 / 83.33	133.33 / 116.67 / 100.00
	External Pressure	Min/Std/Max	mmAq	-	-
			Pa	-	-
Piping Connections	Liquid Pipe		Ø, mm	6.35	6.35
			Ø, inch	1/4"	1/4"
	Gas Pipe		Ø, mm	12.70	12.70
			Ø, inch	1/2"	1/2"
	Drain Pipe		Ø, mm	VP20 (OD 26,ID 20)	VP20 (OD 26,ID 20)
Field Wiring	Power Source Wire		mm²	1.5 - 2.5	1.5 - 2.5
	Transmission Cable		mm²	0.75 - 1.50	0.75 - 1.50
Refrigerant	Type		-	R410A	R410A
	Control Method		-	EEV(O)	EEV(O)
Sound	Pressure	High / Mid / Low	dB(A)	29 / 27 / 24	35 / 31 / 27
	Power	Cooling		48	52
Dimension	Net Weight		kg	10.5	10.5
	Shipping Weight		kg	13.0	13.0
	Net Dimensions (WxHxD)		mm	970 x 135 x 410	970 x 135 x 410
	Shipping Dimensions (WxHxD)		mm	1,164 x 212 x 478	1,164 x 212 x 478
Panel Size	Panel model		-	PC1NUSMAN	PC1NUSMAN
	Panel Net Weight		kg	3.1	3.1
	Shipping Weight		kg	6.4	6.4
	Net Dimensions (WxHxD)		mm	1,198 x 25 x 500	1,198 x 25 x 500
	Shipping Dimensions (WxHxD)		mm	1,262 x 144 x 542	1,262 x 144 x 542
Additional Accessories	Drain Pump	Drain Pump	- / Model	-	-
		Max. lifting Height / Displacement	mm/liter/h	-	-
	Air Filter		-	-	-

* Specifications may be subject to change without prior notice for product improvement.
* Mode
  - HP : Heat Pump, HR : Heat Recovery
* Nominal cooling capacities are based on;
  - Indoor temperature : 27°C DB, 19°C WB
  - Outdoor temperature : 35°C DB, 24°C WB, Equivalent refrigerant piping : 7.5m, Level differences : 0m
* Nominal heating capacities are based on;
  - Indoor temperature : 20°C DB, 15°C WB
  - Outdoor temperature : 7°C DB, 6°C WB, Equivalent refrigerant piping : 7.5m, Level differences : 0m
* Sound pressure was acquired in an anechoic room. Thus actual noise level may be different depending on the installation conditions.
* These products contain R410A which is fluorinated greenhouse gas.
* Heat Exchanger type : Fin & Tube (Fin : Al, Tube : Cu)

1 Specifications

1Way Cassette

Type				1Way Cassette	1Way Cassette
Model				AM056JN1DEH/EU	AM071JN1DEH/EU
Power Supply			Ø, #, V, Hz	1,2,220-240,50	1,2,220-240,50
Mode			-	HP/HR	HP/HR
Performance	Capacity (Nominal)	Cooling	kW	5.60	7.10
			Btu/h	19,100	24,200
		Heating	kW	6.30	8.00
			Btu/h	21,500	27,300
Power	Power Input (Nominal)	Cooling	W	55.00	80.00
		Heating		55.00	80.00
	Current Input (Nominal)	Cooling	A	0.28	0.40
		Heating		0.28	0.40
Fan	Motor	Type	-	Crossflow Fan	Crossflow Fan
		Output x n	w	54 x 1	54 x 1
	Air Flow Rate	H/M/L (UL)	CMM	16.00 / 14.00 / 12.50	17.00 / 15.50 / 14.00
			l/s	266.67 / 233.33 / 208.33	283.33 / 258.33 / 233.33
	External Pressure	Min/Std/Max	mmAq	-	-
			Pa	-	-
Piping Connections	Liquid Pipe		Ø, mm	6.35	9.52
			Ø, inch	1/4"	3/8"
	Gas Pipe		Ø, mm	12.70	15.88
			Ø, inch	1/2"	5/8"
	Drain Pipe		Ø, mm	VP20 (OD 25,ID 20)	VP20 (OD 25,ID 20)
Field Wiring	Power Source Wire		mm²	1.5 - 2.5	1.5 - 2.5
	Transmission Cable		mm²	0.75 - 1.50	0.75 - 1.50
Refrigerant	Type		-	R410A	R410A
	Control Method		-	EEV INCLUDED	EEV INCLUDED
Sound	Pressure	High / Mid / Low	dB(A)	36.0 / 33.0 / 31.0	39.0 / 37.0 / 34.0
	Power	Cooling		58.0	60.0
Dimension	Net Weight		kg	14.50	14.50
	Shipping Weight		kg	18.50	18.50
	Net Dimensions (WxHxD)		mm	1,200 x 138 x 450	1,200 x 138 x 450
	Shipping Dimensions (WxHxD)		mm	1,435 x 224 x 525	1,435 x 224 x 525
Panel Size	Panel model		-	PC1BWSMAN	PC1BWSMAN
	Panel Net Weight		kg	6.30	6.30
	Shipping Weight		kg	8.30	8.30
	Net Dimensions (WxHxD)		mm	1,410 x 23 x 500	1,410 x 23 x 500
	Shipping Dimensions (WxHxD)		mm	1,474 x 122 x 566	1,474 x 122 x 566
Additional Accessories	Drain Pump	Drain Pump	- / Model	-	-
		Max. lifting Height / Displacement	mm/liter/h	-	-
	Air Filter		-	-	-

* Specifications may be subject to change without prior notice for product improvement.
* Mode
  - HP : Heat Pump, HR : Heat Recovery
* Nominal cooling capacities are based on;
  - Indoor temperature : 27°C DB, 19°C WB
  - Outdoor temperature : 35°C DB, 24°C WB, Equivalent refrigerant piping : 7.5m, Level differences : 0m
* Nominal heating capacities are based on;
  - Indoor temperature : 20°C DB, 15°C WB
  - Outdoor temperature : 7°C DB, 6°C WB, Equivalent refrigerant piping : 7.5m, Level differences : 0m
* Sound pressure was acquired in an anechoic room. Thus actual noise level may be different depending on the installation conditions.
* These products contain R410A which is fluorinated greenhouse gas.
* Heat Exchanger type : Fin & Tube (Fin : Al, Tube : Cu)

2 Capacity table

1Way Cassette

Cooling

TC : Total Capacity, SHC : Sensible Heat Capacity

Capacity Index	Outdoor Air Temp. (℃,DB)	Indoor temperature													
		20(℃,DB)		23(℃,DB)		26(℃,DB)		27(℃,DB)		28(℃,DB)		30(℃,DB)		32(℃,DB)	
		14(℃,WB)		16(℃,WB)		18(℃,WB)		19(℃,WB)		20(℃,WB)		22(℃,WB)		24(℃,WB)	
		TC	SHC	TC	SHC	TC	SHC	TC	SHC	TC	SHC	TC	SHC	TC	SHC
017	10	1.2	1.0	1.4	1.1	1.6	1.2	1.7	1.2	1.8	1.2	1.9	1.2	2.0	1.1
	12	1.2	1.0	1.4	1.1	1.6	1.2	1.7	1.2	1.8	1.2	1.9	1.2	2.0	1.1
	14	1.2	1.0	1.4	1.1	1.6	1.2	1.7	1.2	1.8	1.2	1.9	1.2	2.0	1.1
	16	1.2	1.0	1.4	1.1	1.6	1.2	1.7	1.2	1.8	1.2	1.9	1.2	2.0	1.1
	18	1.2	1.0	1.4	1.1	1.6	1.2	1.7	1.2	1.8	1.2	1.9	1.2	2.0	1.1
	20	1.2	1.0	1.4	1.1	1.6	1.2	1.7	1.2	1.8	1.2	1.9	1.2	2.0	1.1
	21	1.2	1.0	1.4	1.1	1.6	1.2	1.7	1.2	1.8	1.2	1.9	1.2	2.0	1.1
	23	1.2	1.0	1.4	1.1	1.6	1.2	1.7	1.2	1.8	1.2	1.9	1.2	2.0	1.1
	25	1.2	1.0	1.4	1.1	1.6	1.2	1.7	1.2	1.8	1.2	1.9	1.2	2.0	1.1
	27	1.2	1.0	1.4	1.1	1.6	1.2	1.7	1.2	1.8	1.2	1.9	1.2	2.0	1.1
	29	1.2	1.0	1.4	1.1	1.6	1.2	1.7	1.2	1.8	1.2	1.9	1.2	2.0	1.1
	31	1.2	1.0	1.4	1.1	1.6	1.2	1.7	1.2	1.8	1.2	1.9	1.2	2.0	1.1
	33	1.2	1.0	1.4	1.1	1.6	1.2	1.7	1.2	1.8	1.2	1.9	1.2	2.0	1.1
	35	1.2	1.0	1.4	1.1	1.6	1.2	1.7	1.2	1.8	1.2	1.9	1.2	2.0	1.1
	37	1.2	1.0	1.4	1.1	1.6	1.2	1.7	1.2	1.8	1.2	1.9	1.2	2.0	1.1
	39	1.2	1.0	1.4	1.1	1.6	1.2	1.7	1.2	1.8	1.2	1.9	1.2	2.0	1.1
	42	1.2	1.0	1.4	1.1	1.6	1.2	1.7	1.2	1.8	1.2	1.9	1.2	1.9	1.1
	44	1.2	1.0	1.4	1.1	1.5	1.2	1.6	1.1	1.7	1.2	1.8	1.1	1.9	1.0
	46	1.2	1.0	1.4	1.1	1.5	1.1	1.6	1.1	1.7	1.1	1.7	1.1	1.8	1.0
	48	1.2	1.0	1.4	1.1	1.5	1.1	1.5	1.1	1.6	1.1	1.7	1.1	1.8	1.0
022	10	1.5	1.3	1.8	1.4	2.1	1.5	2.2	1.5	2.3	1.5	2.5	1.6	2.6	1.4
	12	1.5	1.3	1.8	1.4	2.1	1.5	2.2	1.5	2.3	1.5	2.5	1.6	2.6	1.4
	14	1.5	1.3	1.8	1.4	2.1	1.5	2.2	1.5	2.3	1.5	2.5	1.6	2.6	1.4
	16	1.5	1.3	1.8	1.4	2.1	1.5	2.2	1.5	2.3	1.5	2.4	1.5	2.6	1.4
	18	1.5	1.3	1.8	1.4	2.1	1.5	2.2	1.5	2.3	1.5	2.4	1.5	2.6	1.4
	20	1.5	1.3	1.8	1.4	2.1	1.5	2.2	1.5	2.3	1.5	2.4	1.5	2.6	1.4
	21	1.5	1.3	1.8	1.4	2.1	1.5	2.2	1.5	2.3	1.5	2.4	1.5	2.6	1.4
	23	1.5	1.3	1.8	1.4	2.1	1.5	2.2	1.5	2.3	1.5	2.4	1.5	2.6	1.4
	25	1.5	1.3	1.8	1.4	2.1	1.5	2.2	1.5	2.3	1.5	2.4	1.5	2.6	1.4
	27	1.5	1.3	1.8	1.4	2.1	1.5	2.2	1.5	2.3	1.5	2.4	1.5	2.6	1.4
	29	1.5	1.3	1.8	1.4	2.1	1.5	2.2	1.5	2.3	1.5	2.4	1.5	2.6	1.4
	31	1.5	1.3	1.8	1.4	2.1	1.5	2.2	1.5	2.3	1.5	2.4	1.5	2.6	1.4
	33	1.5	1.3	1.8	1.4	2.1	1.5	2.2	1.5	2.3	1.5	2.4	1.5	2.6	1.4
	35	1.5	1.3	1.8	1.4	2.1	1.5	2.2	1.5	2.3	1.5	2.4	1.5	2.6	1.4
	37	1.5	1.3	1.8	1.4	2.1	1.5	2.2	1.5	2.3	1.5	2.4	1.5	2.6	1.4
	39	1.5	1.3	1.8	1.4	2.1	1.5	2.2	1.5	2.3	1.5	2.4	1.5	2.5	1.3
	42	1.5	1.3	1.8	1.4	2.1	1.5	2.2	1.5	2.3	1.5	2.4	1.5	2.4	1.3
	44	1.5	1.3	1.8	1.4	2.0	1.4	2.1	1.4	2.2	1.4	2.3	1.4	2.4	1.2
	46	1.5	1.3	1.8	1.4	2.0	1.4	2.0	1.4	2.1	1.4	2.2	1.4	2.3	1.2
	48	1.5	1.3	1.8	1.4	2.0	1.4	2.0	1.3	2.1	1.4	2.1	1.3	2.2	1.1
028	10	1.9	1.6	2.3	1.8	2.6	1.9	2.8	1.9	2.9	1.9	3.1	1.9	3.4	1.9
	12	1.9	1.6	2.3	1.8	2.6	1.9	2.8	1.9	2.9	1.9	3.1	1.9	3.3	1.8
	14	1.9	1.6	2.3	1.8	2.6	1.9	2.8	1.9	2.9	1.9	3.1	1.9	3.3	1.8
	16	1.9	1.6	2.3	1.8	2.6	1.9	2.8	1.9	2.9	1.9	3.1	1.9	3.3	1.8
	18	1.9	1.6	2.3	1.8	2.6	1.9	2.8	1.9	2.9	1.9	3.1	1.9	3.3	1.8
	20	1.9	1.6	2.3	1.8	2.6	1.9	2.8	1.9	2.9	1.9	3.1	1.9	3.3	1.8
	21	1.9	1.6	2.3	1.8	2.6	1.9	2.8	1.9	2.9	1.9	3.1	1.9	3.3	1.8
	23	1.9	1.6	2.3	1.8	2.6	1.9	2.8	1.9	2.9	1.9	3.1	1.9	3.3	1.8
	25	1.9	1.6	2.3	1.8	2.6	1.9	2.8	1.9	2.9	1.9	3.1	1.9	3.3	1.8
	27	1.9	1.6	2.3	1.8	2.6	1.9	2.8	1.9	2.9	1.9	3.1	1.9	3.3	1.8
	29	1.9	1.6	2.3	1.8	2.6	1.9	2.8	1.9	2.9	1.9	3.1	1.9	3.3	1.8
	31	1.9	1.6	2.3	1.8	2.6	1.9	2.8	1.9	2.9	1.9	3.1	1.9	3.3	1.8
	33	1.9	1.6	2.3	1.8	2.6	1.9	2.8	1.9	2.9	1.9	3.1	1.9	3.3	1.8
	35	1.9	1.6	2.3	1.8	2.6	1.9	2.8	1.9	2.9	1.9	3.1	1.9	3.3	1.8
	37	1.9	1.6	2.3	1.8	2.6	1.9	2.8	1.9	2.9	1.9	3.1	1.9	3.3	1.8
	39	1.9	1.6	2.3	1.8	2.6	1.9	2.8	1.9	2.9	1.9	3.0	1.8	3.2	1.7
	42	1.9	1.6	2.3	1.8	2.6	1.9	2.8	1.9	2.9	1.9	2.9	1.8	3.1	1.7
	44	1.9	1.6	2.3	1.8	2.5	1.8	2.7	1.8	2.8	1.8	2.8	1.7	3.0	1.6
	46	1.9	1.6	2.3	1.8	2.5	1.8	2.6	1.8	2.7	1.8	2.7	1.6	2.9	1.6
	48	1.9	1.6	2.2	1.8	2.4	1.8	2.5	1.7	2.6	1.7	2.7	1.6	2.8	1.5

2 Capacity table

1Way Cassette

Cooling

TC : Total Capacity, SHC : Sensible Heat Capacity

Capacity Index	Outdoor Air Temp. (℃,DB)	Indoor temperature													
		20(℃,DB)		23(℃,DB)		26(℃,DB)		27(℃,DB)		28(℃,DB)		30(℃,DB)		32(℃,DB)	
		14(℃,WB)		16(℃,WB)		18(℃,WB)		19(℃,WB)		20(℃,WB)		22(℃,WB)		24(℃,WB)	
		TC	SHC	TC	SHC	TC	SHC	TC	SHC	TC	SHC	TC	SHC	TC	SHC
036	10	2.5	2.2	2.9	2.4	3.4	2.4	3.6	2.6	3.7	2.6	4.0	2.6	4.3	2.5
	12	2.5	2.2	2.9	2.4	3.4	2.4	3.6	2.6	3.7	2.6	4.0	2.6	4.3	2.5
	14	2.5	2.2	2.9	2.4	3.4	2.4	3.6	2.6	3.7	2.6	4.0	2.6	4.3	2.5
	16	2.5	2.2	2.9	2.4	3.4	2.4	3.6	2.6	3.7	2.6	4.0	2.6	4.3	2.5
	18	2.5	2.2	2.9	2.4	3.4	2.4	3.6	2.6	3.7	2.6	4.0	2.6	4.3	2.5
	20	2.5	2.2	2.9	2.4	3.4	2.4	3.6	2.6	3.7	2.6	4.0	2.6	4.2	2.4
	21	2.5	2.2	2.9	2.4	3.4	2.4	3.6	2.6	3.7	2.6	4.0	2.6	4.2	2.4
	23	2.5	2.2	2.9	2.4	3.4	2.4	3.6	2.6	3.7	2.6	4.0	2.6	4.2	2.4
	25	2.5	2.2	2.9	2.4	3.4	2.4	3.6	2.6	3.7	2.6	4.0	2.6	4.2	2.4
	27	2.5	2.2	2.9	2.4	3.4	2.4	3.6	2.6	3.7	2.6	4.0	2.6	4.2	2.4
	29	2.5	2.2	2.9	2.4	3.4	2.4	3.6	2.6	3.7	2.6	4.0	2.6	4.2	2.4
	31	2.5	2.2	2.9	2.4	3.4	2.4	3.6	2.6	3.7	2.6	4.0	2.6	4.2	2.4
	33	2.5	2.2	2.9	2.4	3.4	2.4	3.6	2.6	3.7	2.6	4.0	2.6	4.2	2.4
	35	2.5	2.2	2.9	2.4	3.4	2.4	3.6	2.6	3.7	2.6	4.0	2.6	4.2	2.4
	37	2.5	2.2	2.9	2.4	3.4	2.4	3.6	2.6	3.7	2.6	3.9	2.5	4.2	2.4
	39	2.5	2.2	2.9	2.4	3.4	2.4	3.6	2.6	3.7	2.6	3.9	2.5	4.1	2.3
	42	2.5	2.2	2.9	2.4	3.4	2.4	3.6	2.6	3.7	2.6	3.8	2.5	4.0	2.2
	44	2.5	2.2	2.9	2.4	3.3	2.3	3.4	2.5	3.6	2.5	3.7	2.4	3.9	2.2
	46	2.5	2.2	2.9	2.4	3.2	2.3	3.3	2.4	3.4	2.4	3.6	2.3	3.8	2.1
	48	2.5	2.2	2.8	2.3	3.2	2.2	3.2	2.3	3.4	2.4	3.5	2.2	3.6	2.0
056	10	3.9	3.2	4.6	3.5	5.3	3.9	5.6	3.9	5.8	3.9	6.3	3.9	6.7	3.7
	12	3.9	3.2	4.6	3.5	5.3	3.9	5.6	3.9	5.8	3.9	6.3	3.9	6.7	3.7
	14	3.9	3.2	4.6	3.5	5.3	3.9	5.6	3.9	5.8	3.9	6.2	3.8	6.7	3.7
	16	3.9	3.2	4.6	3.5	5.3	3.9	5.6	3.9	5.8	3.9	6.2	3.8	6.6	3.6
	18	3.9	3.2	4.6	3.5	5.3	3.9	5.6	3.9	5.8	3.9	6.2	3.8	6.6	3.6
	20	3.9	3.2	4.6	3.5	5.3	3.9	5.6	3.9	5.8	3.9	6.2	3.8	6.6	3.6
	21	3.9	3.2	4.6	3.5	5.3	3.9	5.6	3.9	5.8	3.9	6.2	3.8	6.6	3.6
	23	3.9	3.2	4.6	3.5	5.3	3.9	5.6	3.9	5.8	3.9	6.2	3.8	6.6	3.6
	25	3.9	3.2	4.6	3.5	5.3	3.9	5.6	3.9	5.8	3.9	6.2	3.8	6.6	3.6
	27	3.9	3.2	4.6	3.5	5.3	3.9	5.6	3.9	5.8	3.9	6.2	3.8	6.6	3.6
	29	3.9	3.2	4.6	3.5	5.3	3.9	5.6	3.9	5.8	3.9	6.2	3.8	6.6	3.6
	31	3.9	3.2	4.6	3.5	5.3	3.9	5.6	3.9	5.8	3.9	6.2	3.8	6.6	3.6
	33	3.9	3.2	4.6	3.5	5.3	3.9	5.6	3.9	5.8	3.9	6.2	3.8	6.6	3.6
	35	3.9	3.2	4.6	3.5	5.3	3.9	5.6	3.9	5.8	3.9	6.2	3.8	6.6	3.6
	37	3.9	3.2	4.6	3.5	5.3	3.9	5.6	3.9	5.8	3.9	6.2	3.8	6.6	3.5
	39	3.9	3.2	4.6	3.5	5.3	3.9	5.6	3.9	5.8	3.9	6.2	3.8	6.6	3.4
	42	3.9	3.2	4.6	3.5	5.3	3.9	5.5	3.8	5.7	3.9	6.1	3.7	6.4	3.3
	44	3.9	3.2	4.6	3.5	5.1	3.8	5.3	3.7	5.6	3.7	5.9	3.6	6.2	3.2
	46	3.9	3.2	4.6	3.5	5.0	3.7	5.2	3.6	5.4	3.6	5.7	3.5	6.0	3.1
	48	3.9	3.2	4.5	3.4	5.0	3.6	5.0	3.5	5.3	3.6	5.5	3.4	5.8	3.0
071	10	4.9	4.0	5.8	4.5	6.7	4.8	7.1	5.0	7.4	5.0	8.0	5.1	8.5	4.8
	12	4.9	4.0	5.8	4.5	6.7	4.8	7.1	5.0	7.4	5.0	7.9	5.0	8.5	4.8
	14	4.9	4.0	5.8	4.5	6.7	4.8	7.1	5.0	7.4	5.0	7.9	5.0	8.5	4.8
	16	4.9	4.0	5.8	4.5	6.7	4.8	7.1	5.0	7.4	5.0	7.9	5.0	8.4	4.8
	18	4.9	4.0	5.8	4.5	6.7	4.8	7.1	5.0	7.4	5.0	7.9	5.0	8.4	4.8
	20	4.9	4.0	5.8	4.5	6.7	4.8	7.1	5.0	7.4	5.0	7.9	5.0	8.4	4.8
	21	4.9	4.0	5.8	4.5	6.7	4.8	7.1	5.0	7.4	5.0	7.9	5.0	8.4	4.8
	23	4.9	4.0	5.8	4.5	6.7	4.8	7.1	5.0	7.4	5.0	7.9	5.0	8.4	4.8
	25	4.9	4.0	5.8	4.5	6.7	4.8	7.1	5.0	7.4	5.0	7.9	5.0	8.4	4.8
	27	4.9	4.0	5.8	4.5	6.7	4.8	7.1	5.0	7.4	5.0	7.9	5.0	8.4	4.8
	29	4.9	4.0	5.8	4.5	6.7	4.8	7.1	5.0	7.4	5.0	7.9	5.0	8.4	4.8
	31	4.9	4.0	5.8	4.5	6.7	4.8	7.1	5.0	7.4	5.0	7.9	5.0	8.4	4.8
	33	4.9	4.0	5.8	4.5	6.7	4.8	7.1	5.0	7.4	5.0	7.9	5.0	8.4	4.8
	35	4.9	4.0	5.8	4.5	6.7	4.8	7.1	5.0	7.4	5.0	7.9	5.0	8.4	4.8
	37	4.9	4.0	5.8	4.5	6.7	4.8	7.1	5.0	7.3	4.9	7.8	4.9	8.2	4.7
	39	4.9	4.0	5.8	4.5	6.7	4.8	7.1	5.0	7.3	4.9	7.7	4.8	8.1	4.6
	42	4.9	4.0	5.8	4.5	6.7	4.8	7.0	4.9	7.2	4.8	7.6	4.7	7.9	4.5
	44	4.9	4.0	5.8	4.5	6.5	4.6	6.8	4.8	7.0	4.7	7.3	4.5	7.6	4.3
	46	4.9	4.0	5.7	4.5	6.4	4.6	6.6	4.6	6.8	4.6	7.0	4.4	7.4	4.2
	48	4.8	3.9	5.7	4.4	6.3	4.5	6.4	4.5	6.7	4.5	6.8	4.3	7.2	4.1

2 Capacity table

1Way Cassette

Heating

TC : Total Capacity

Capacity Index	Outdoor Air Temp. (℃)		Indoor temperature (℃,DB)				
			16(℃,DB)	18(℃,DB)	20(℃,DB)	22(℃,DB)	24(℃,DB)
			TC	TC	TC	TC	TC
	DB	WB	kW	kW	kW	kW	kW
017	-19.8	-20.0	1.1	1.1	1.1	1.1	1.1
	-18.8	-19.0	1.1	1.1	1.1	1.1	1.1
	-16.7	-17.0	1.2	1.2	1.2	1.2	1.2
	-14.7	-15.0	1.3	1.2	1.2	1.2	1.2
	-12.6	-13.0	1.4	1.4	1.4	1.4	1.3
	-10.5	-11.0	1.5	1.5	1.4	1.4	1.4
	-9.5	-10.0	1.5	1.5	1.5	1.4	1.4
	-8.5	-9.1	1.6	1.6	1.6	1.5	1.5
	-7.0	-7.6	1.7	1.7	1.7	1.5	1.5
	-5.0	-5.6	1.8	1.7	1.7	1.7	1.7
	-3.0	-3.7	1.9	1.9	1.8	1.7	1.7
	0.0	-0.7	2.0	1.9	1.9	1.7	1.7
	3.0	2.2	2.1	2.0	1.9	1.7	1.7
	5.0	4.1	2.1	2.1	1.9	1.7	1.7
	7.0	6.0	2.1	2.1	1.9	1.7	1.7
	9.0	7.9	2.3	2.1	1.9	1.7	1.7
	11.0	9.8	2.3	2.1	1.9	1.7	1.7
	13.0	11.8	2.3	2.1	1.9	1.7	1.7
	15.0	13.7	2.3	2.1	1.9	1.7	1.7
022	-19.8	-20.0	1.5	1.5	1.5	1.5	1.5
	-18.8	-19.0	1.5	1.5	1.5	1.5	1.5
	-16.7	-17.0	1.6	1.6	1.6	1.6	1.6
	-14.7	-15.0	1.7	1.6	1.6	1.6	1.6
	-12.6	-13.0	1.8	1.8	1.8	1.8	1.7
	-10.5	-11.0	2.0	2.0	1.9	1.9	1.9
	-9.5	-10.0	2.1	2.0	2.0	1.9	1.9
	-8.5	-9.1	2.2	2.1	2.1	2.0	2.0
	-7.0	-7.6	2.3	2.2	2.2	2.0	2.0
	-5.0	-5.6	2.4	2.3	2.3	2.2	2.2
	-3.0	-3.7	2.5	2.5	2.4	2.3	2.2
	0.0	-0.7	2.6	2.5	2.5	2.3	2.2
	3.0	2.2	2.7	2.6	2.5	2.3	2.2
	5.0	4.1	2.8	2.7	2.5	2.3	2.2
	7.0	6.0	2.8	2.7	2.5	2.3	2.2
	9.0	7.9	3.0	2.7	2.5	2.3	2.2
	11.0	9.8	3.0	2.7	2.5	2.3	2.2
	13.0	11.8	3.0	2.7	2.5	2.3	2.2
	15.0	13.7	3.0	2.7	2.5	2.3	2.2
028	-19.8	-20.0	1.9	1.9	1.9	1.9	1.9
	-18.8	-19.0	1.9	1.9	1.9	1.9	1.9
	-16.7	-17.0	2.0	2.0	2.0	2.0	1.9
	-14.7	-15.0	2.1	2.1	2.0	2.0	1.9
	-12.6	-13.0	2.2	2.2	2.2	2.1	2.1
	-10.5	-11.0	2.3	2.3	2.3	2.3	2.2
	-9.5	-10.0	2.3	2.3	2.3	2.3	2.2
	-8.5	-9.1	2.4	2.4	2.4	2.4	2.3
	-7.0	-7.6	2.5	2.4	2.4	2.4	2.3
	-5.0	-5.6	2.6	2.6	2.5	2.5	2.4
	-3.0	-3.7	2.8	2.7	2.7	2.6	2.5
	0.0	-0.7	2.9	2.8	2.8	2.7	2.6
	3.0	2.2	3.0	3.0	2.9	2.8	2.7
	5.0	4.1	3.2	3.1	3.1	2.9	2.7
	7.0	6.0	3.3	3.2	3.2	3.0	2.7
	9.0	7.9	3.4	3.3	3.2	3.0	2.7
	11.0	9.8	3.5	3.3	3.2	3.0	2.7
	13.0	11.8	3.6	3.4	3.2	3.0	2.7
	15.0	13.7	3.7	3.4	3.2	3.0	2.7

2 Capacity table

1Way Cassette

Heating

TC : Total Capacity

Capacity Index	Outdoor Air Temp. (℃)		Indoor temperature (℃,DB)				
			16(℃,DB)	18(℃,DB)	20(℃,DB)	22(℃,DB)	24(℃,DB)
			TC	TC	TC	TC	TC
	DB	WB	kW	kW	kW	kW	kW
036	-19.8	-20.0	2.4	2.4	2.3	2.3	2.3
	-18.8	-19.0	2.5	2.4	2.3	2.3	2.3
	-16.7	-17.0	2.6	2.5	2.4	2.4	2.3
	-14.7	-15.0	2.7	2.6	2.5	2.5	2.4
	-12.6	-13.0	2.8	2.7	2.7	2.6	2.6
	-10.5	-11.0	2.9	2.9	2.9	2.8	2.8
	-9.5	-10.0	2.9	2.9	2.9	2.8	2.8
	-8.5	-9.1	3.0	3.0	3.0	2.9	2.9
	-7.0	-7.6	3.1	3.1	3.0	3.0	2.9
	-5.0	-5.6	3.3	3.2	3.2	3.1	3.0
	-3.0	-3.7	3.4	3.4	3.3	3.2	3.1
	0.0	-0.7	3.6	3.6	3.5	3.4	3.2
	3.0	2.2	3.8	3.7	3.7	3.5	3.4
	5.0	4.1	3.9	3.9	3.8	3.6	3.4
	7.0	6.0	4.1	4.1	4.0	3.7	3.4
	9.0	7.9	4.2	4.1	4.0	3.7	3.4
	11.0	9.8	4.4	4.2	4.0	3.7	3.4
	13.0	11.8	4.5	4.2	4.0	3.7	3.4
	15.0	13.7	4.6	4.3	4.0	3.7	3.4
056	-19.8	-20.0	3.9	3.8	3.8	3.7	3.7
	-18.8	-19.0	3.9	3.9	3.8	3.7	3.7
	-16.7	-17.0	4.0	4.0	3.9	3.8	3.8
	-14.7	-15.0	4.2	4.1	4.0	3.9	3.8
	-12.6	-13.0	4.4	4.3	4.2	4.1	4.0
	-10.5	-11.0	4.6	4.5	4.4	4.4	4.3
	-9.5	-10.0	4.7	4.6	4.6	4.5	4.4
	-8.5	-9.1	4.8	4.7	4.7	4.6	4.5
	-7.0	-7.6	4.9	4.8	4.8	4.7	4.5
	-5.0	-5.6	5.2	5.1	5.0	4.9	4.7
	-3.0	-3.7	5.4	5.3	5.3	5.1	4.9
	0.0	-0.7	5.7	5.6	5.5	5.3	5.0
	3.0	2.2	5.9	5.9	5.8	5.6	5.3
	5.0	4.1	6.2	6.1	6.0	5.7	5.3
	7.0	6.0	6.5	6.4	6.3	5.8	5.3
	9.0	7.9	6.7	6.5	6.3	5.8	5.3
	11.0	9.8	6.9	6.6	6.3	5.8	5.3
	13.0	11.8	7.1	6.7	6.3	5.8	5.3
	15.0	13.7	7.3	6.8	6.3	5.8	5.3
071	-19.8	-20.0	4.9	4.9	4.8	4.7	4.7
	-18.8	-19.0	5.0	4.9	4.8	4.7	4.7
	-16.7	-17.0	5.1	5.0	4.9	4.8	4.8
	-14.7	-15.0	5.3	5.2	5.1	4.9	4.8
	-12.6	-13.0	5.5	5.4	5.3	5.2	5.1
	-10.5	-11.0	5.8	5.7	5.6	5.5	5.5
	-9.5	-10.0	6.0	5.9	5.8	5.7	5.6
	-8.5	-9.1	6.1	6.0	5.9	5.8	5.7
	-7.0	-7.6	6.2	6.1	6.0	5.9	5.8
	-5.0	-5.6	6.5	6.5	6.4	6.2	6.0
	-3.0	-3.7	6.9	6.8	6.7	6.4	6.2
	0.0	-0.7	7.2	7.1	7.0	6.7	6.4
	3.0	2.2	7.6	7.5	7.3	7.1	6.8
	5.0	4.1	7.9	7.8	7.7	7.2	6.8
	7.0	6.0	8.2	8.1	8.0	7.4	6.8
	9.0	7.9	8.5	8.2	8.0	7.4	6.8
	11.0	9.8	8.7	8.4	8.0	7.4	6.8
	13.0	11.8	9.0	8.5	8.0	7.4	6.8
	15.0	13.7	9.2	8.6	8.0	7.4	6.8

3 Dimensional drawing

1Way Cassette

AM017HN1DEH/EU, AM022HN1DEH/EU

Units : mm / inches

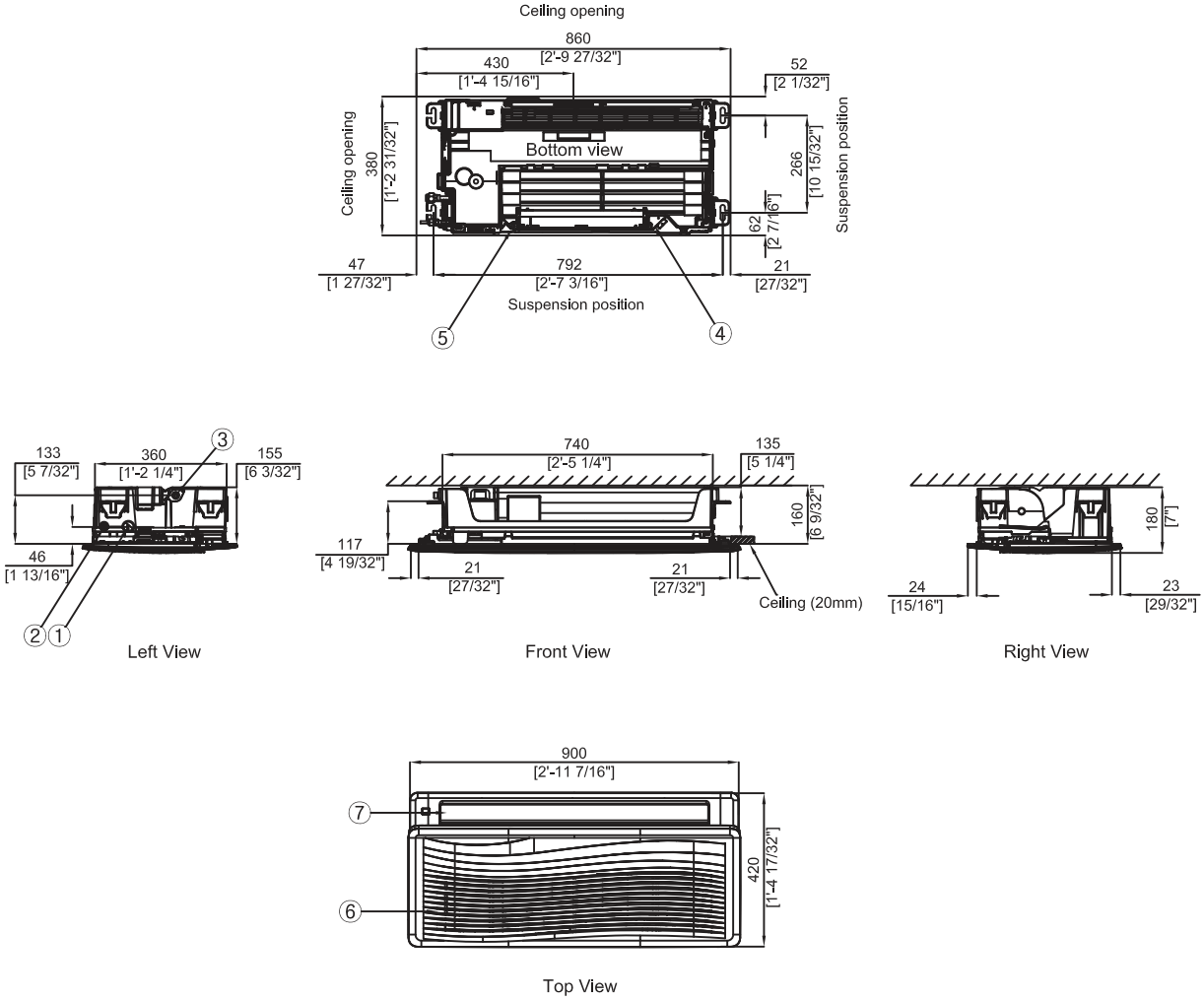

Table of descriptions			
1	Refrigerant gas pipe	7	Air outlet louver
2	Refrigerant liquid pipe	8	
3	Drain pipe	9	
4	Power supply wiring conduit	10	
5	Communication wiring conduit	11	
6	Air inlet grille	12	

3 Dimensional drawing

1Way Cassette

AM022FN1DEH/EU, AM028FN1DEH/EU, AM036FN1DEH/EU

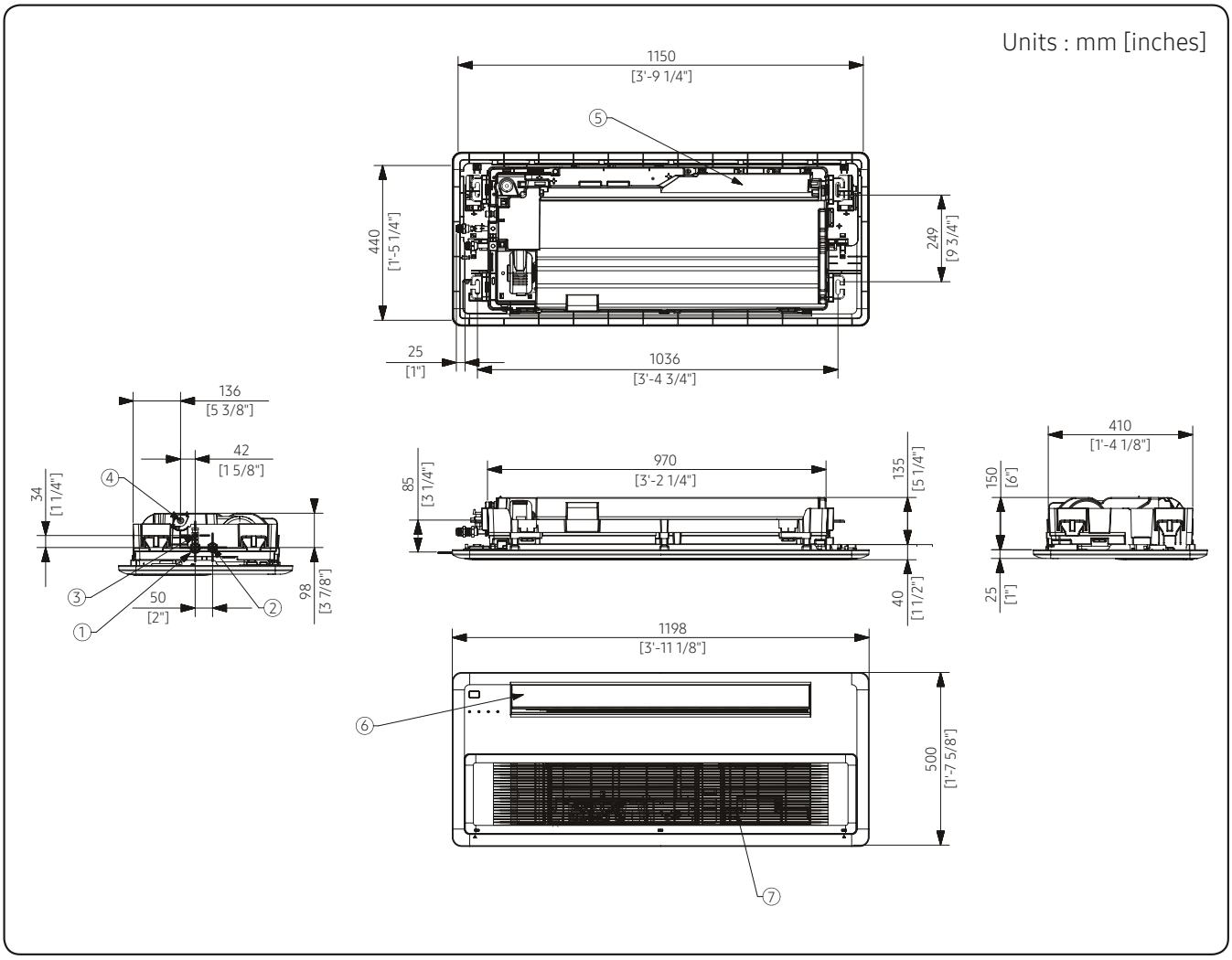

No	Name	Description
1	Water pipe connection out	PF Male 3/4" (20A)
2	Water pipe connection in	PF Male 3/4" (20A)
3	Air vent valve	-
4	Drain hose	VP20 (OD26, ID20)
5	Power supply & Communication wiring conduit	-
6	Air discharge part	-
7	Air suction part	-

3 Dimensional drawing

1Way Cassette

AM056JN1DEH/EU, AM071JN1DEH/EU

Units : mm / inches

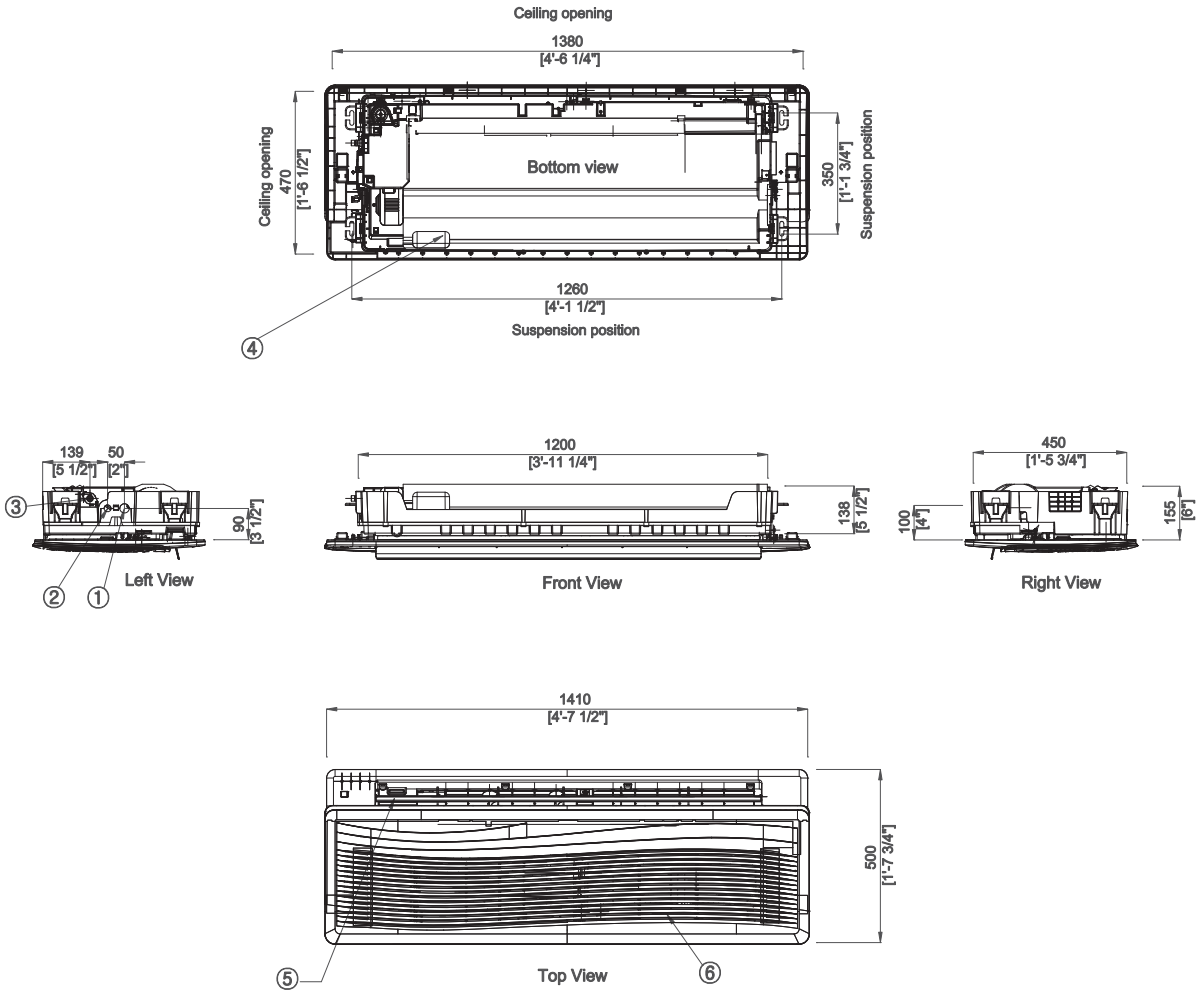

Table of descriptions			
1	Refrigerant gas pipe	7	
2	Refrigerant liquid pipe	8	
3	Condensate drain	9	
4	Power & Comm. wiring conduits	10	
5	Air discharge louver	11	
6	Air suction grille	12	

4 Electrical wiring diagram

1Way Cassette

AM017HN1DEH/EU, AM022HN1DEH/EU, AM056JN1DEH/EU, AM071JN1DEH/EU

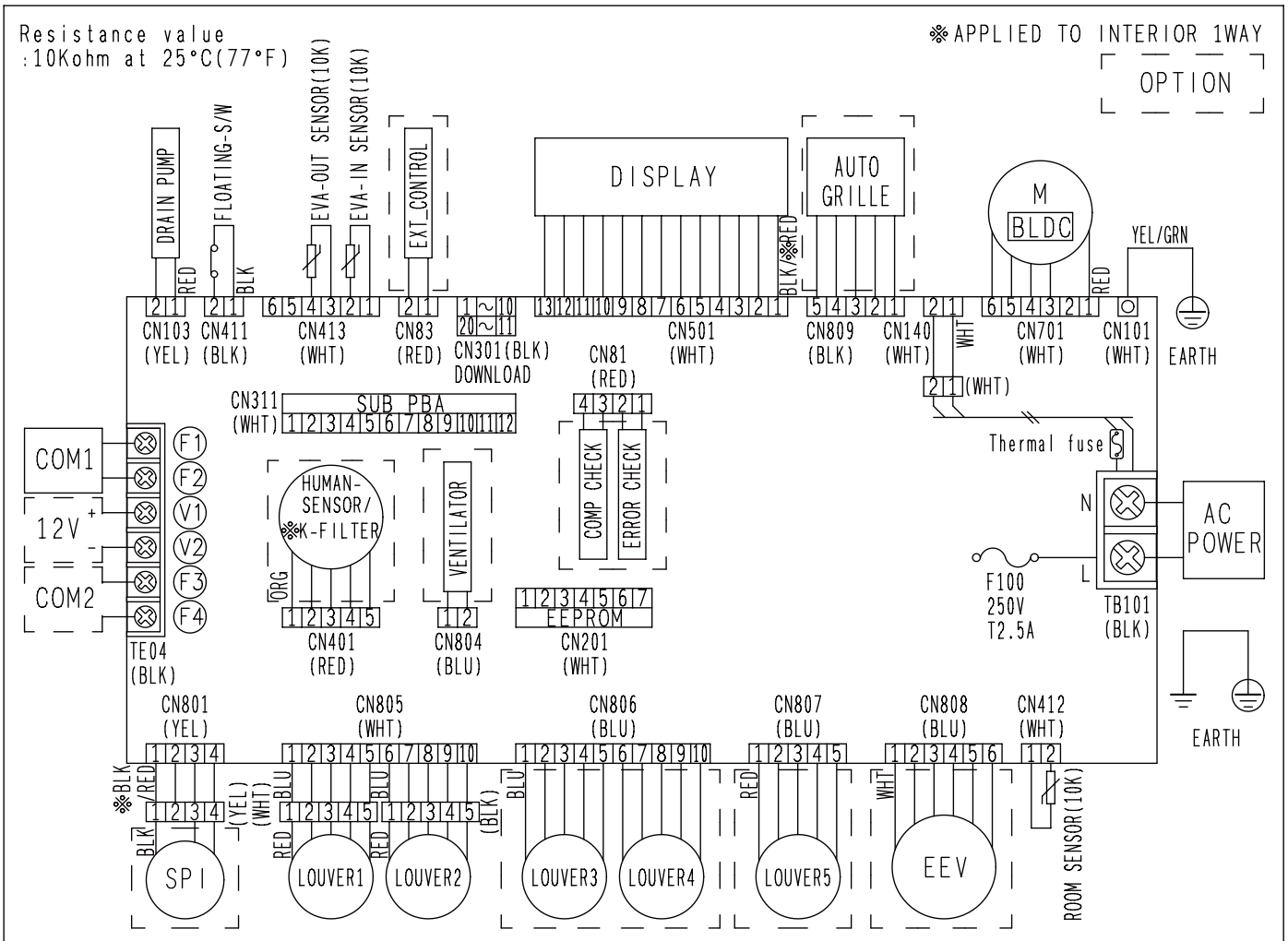

USE COPPER SUPPLY WIRES.
UTILISER DES FILS D'ALIMENTATION EN CUIVRE.

E-PASS
DB68-03616B

LED LAMP DISPLAY					LED DISPLAY FOR ERROR DETECTION
OPERATION	DEFROST	TIMER	FAN	FILTER	○ON ◑FLICKERING X OFF
BLU	GRN	BLU	BLU	BLU	
X	X	◑	X	X	ERROR OF TEMPERATURE SENSOR IN THE INDOOR UNIT(OPEN/SHORT)
◑	X	◑	X	X	ERROR OF EVA IN,OUT SENSOR IN THE INDOOR UNIT(OPEN/SHORT)
X	X	X	◑	X	ERROR OF FAN MOTOR IN THE INDOOR UNIT
◑	X	X	◑	X	ERROR OF OUTDOOR SENSOR(OUTDOOR TEMP./COND/DISCHARGE)
X	X	◑	◑	X	NO COMMUNICATION FOR 2 MINUTES BETWEEN INDOOR AND OUTDOOR UNIT
X	X	◑	◑	◑	ERROR OF OUTDOOR UNIT/SELF-DIAGNOSIS (CHECK ERROR CODE AT OUTDOOR UNIT'S OR SOLUTION DISPLAY)
X	X	X	◑	◑	DETECTION OF THE FLOAT SWITCH
◑	◑	◑	◑	◑	EEPROM ERROR/EEPROM OPTION ERROR
X	X	X	X	◑	NO MATCH BETWEEN OUTDOOR AND INDOOR

NOTE

1. This wiring diagram applies only to the indoor unit.
2. Symbols show as follow;
   BLK : black, RED : red, BLU : blue, WHT:white, YEL : yellow, BRN : brown, SKY : sky-blue, GRN : green
3. For connection wiring indoor-outdoor transmission F1-F2, indoor-wired remotecontroller transmission F3-F4.
4. ⏚: Protective earth(screw), ▭▭▭▭ : Connector, n : The wire quantity

4 Electrical wiring diagram

1Way Cassette

AM022FN1DEH/EU, AM028FN1DEH/EU, AM036FN1DEH/EU

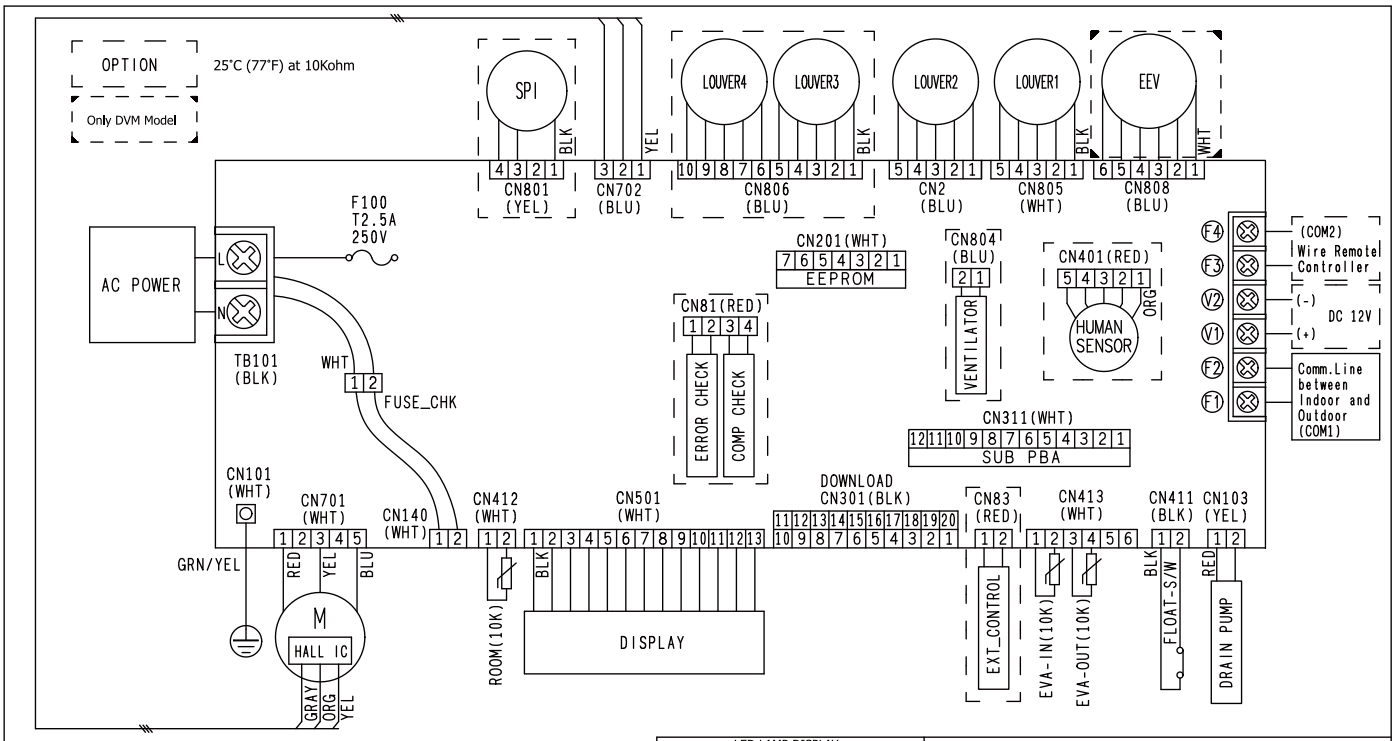

USE COPPER SUPPLY WIRES.

UTILISER DES FILS D'ALIMENTATION EN CUIVRE.

E-PASS
DB68-03609A

DB68-03609A

LED LAMP DISPLAY					LED DISPLAY FOR ERROR DETECTION (○ON ◑FLICKERING X OFF)
OPERATION	DEFROST	TIMER	FAN	FILTER	
X	X	◑	X	X	ERROR OF ROOM TEMPERATURE SENSOR IN THE INDOOR UNIT(OPEN/SHORT)
◑	X	◑	X	X	ERROR OF EVA IN, OUT SENSOR IN THE INDOOR UNIT(OPEN/SHORT)
X	X	X	◑	X	ERROR OF INDOOR FAN
◑	X	X	◑	X	ERROR OF OUTDOOR SENSOR(OUTDOOR TEMP/COND/DISCHARGE)
X	X	◑	◑	X	NO COMMUNICATION FOR 2MINUTES BETWEEN INDOOR AND OUTDOOR UNIT
X	X	◑	◑	◑	ERROR OF OUTDOOR UNIT/SELF-DIAGNOSIS (Check error code at outdoor unit's or solution display)
X	X	X	◑	◑	DETECTION OF THE FLOAT SWITCH
◑	◑	◑	◑	◑	EEPROM ERROR/EEPROM OPTION ERROR
X	X	X	X	◑	NO MATCH BETWEEN OUTDOOR AND INDOOR(Only DVM Model)
◑	X	X	◑	◑	HIGH PRESSURE BLOCKAGE ERROR(Only CAC Model)

NOTE

1. This wiring diagram applies only to the indoor unit.
2. Symbols show as follow;
   BLK : black, RED : red, BLU : blue, WHT:white, YEL : yellow, BRN : brown, SKY : sky-blue, GRN : green
3. For connection wiring indoor-outdoor transmission F1-F2, indoor-wired remotecontroller transmission F3-F4.
4. ⏚: Protective earth(screw), ☐☐☐☐ : Connector, n : The wire quantity

5 Sound pressure level

1Way Cassette

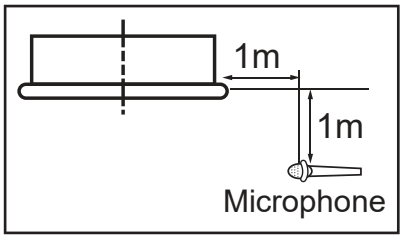

Unit: dB(A)

Model	High	Low
AM017HN1DEH/EU	27	21
AM022FN1DEH/EU	27	23
AM022HN1DEH/EU	27	23
AM028FN1DEH/EU	29	24

Note

Specifications may be subject to change without prior notice.
Sound pressure level is obtained in an anechoic room.
Sound pressure level is a relative value, depending on the distance and acoustic environment.
Sound pressure level may differ depending on operation condition.
dBA = A-weighted sound pressure level
Reference acoustic pressure 0 dB= 20 uPa

NC curve

1) AM017HN1DEH/EU

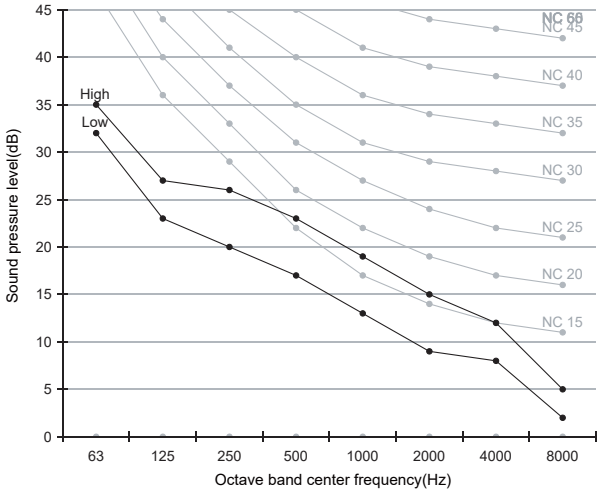

2) AM022FN1DEH/EU

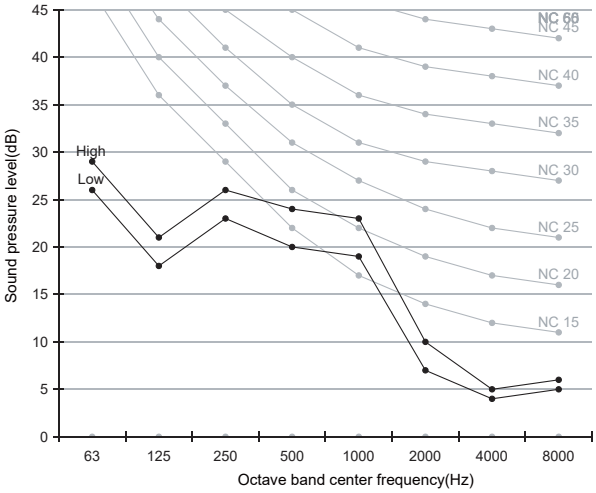

3) AM022HN1DEH/EU

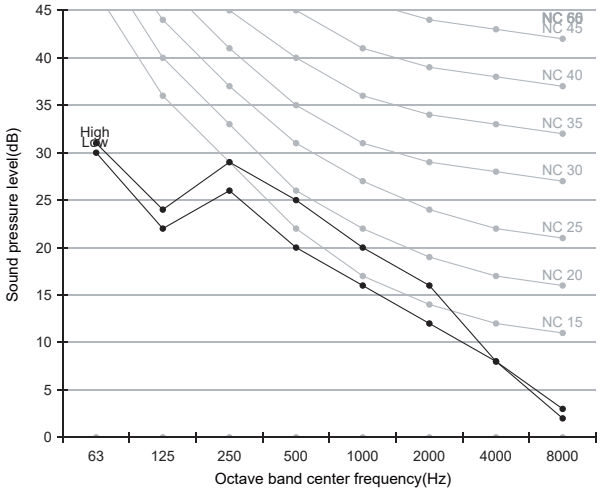

4) AM028FN1DEH/EU

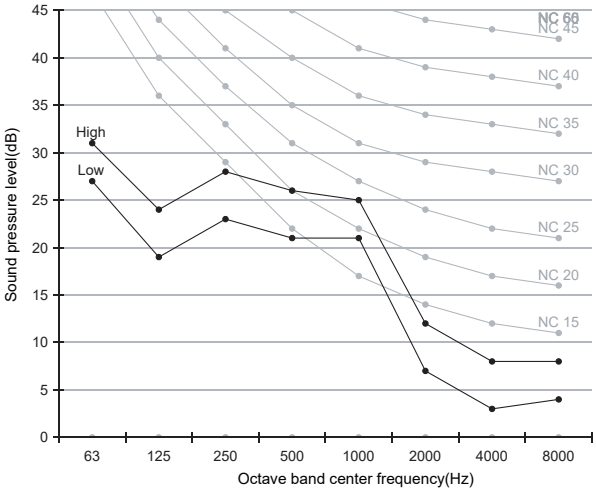

5 Sound pressure level

1Way Cassette

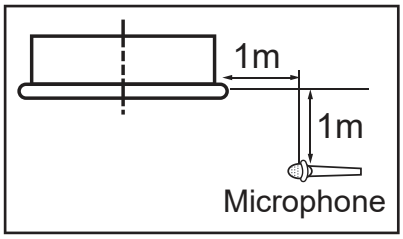

Unit: dB(A)

Model	High	Low
AM036FN1DEH/EU	35	27
AM056JN1DEH/EU	36	31
AM071JN1DEH/EU	39	34

Note

Specifications may be subject to change without prior notice.
Sound pressure level is obtained in an anechoic room.
Sound pressure level is a relative value, depending on the distance and acoustic environment.
Sound pressure level may differ depending on operation condition.
dBA = A-weighted sound pressure level
Reference acoustic pressure 0 dB= 20 uPa

NC curve

1) AM036FN1DEH/EU

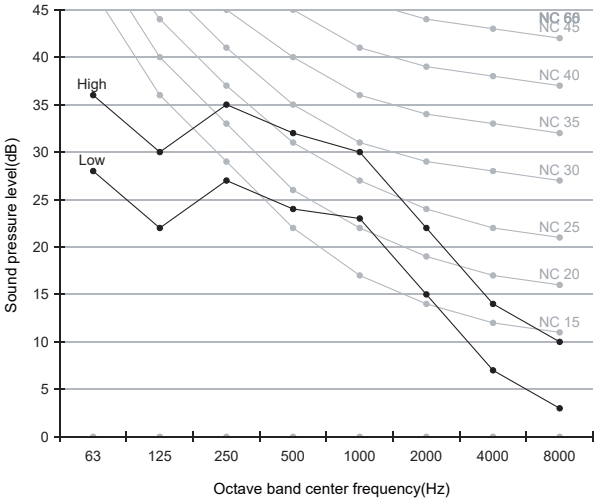

2) AM056JN1DEH/EU

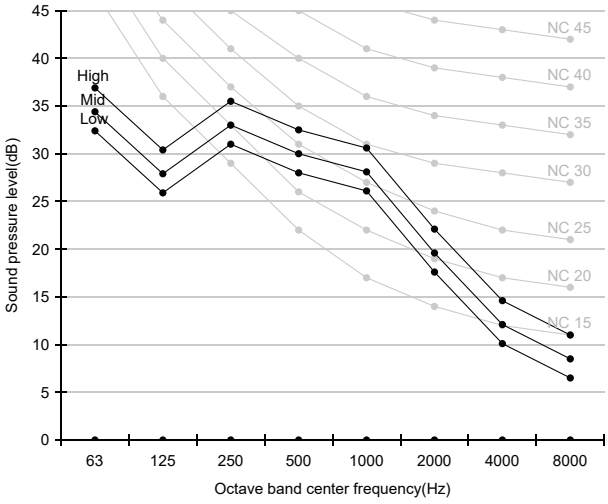

3) AM071JN1DEH/EU

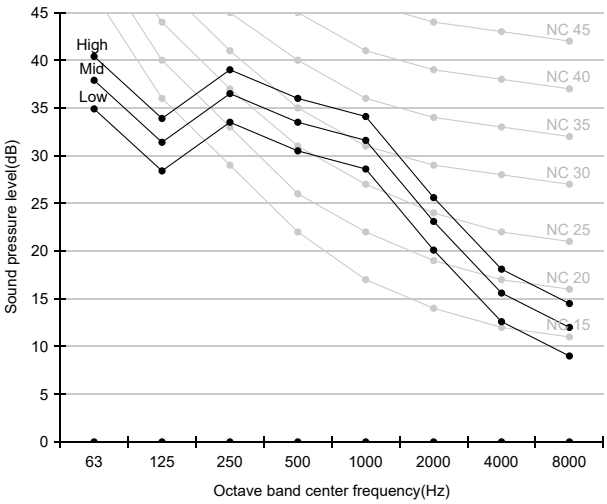

6 Sound power level

1Way Cassette

Note

. Specifications may be subject to change without prior notice.
. Sound power level is an absolute value that a sound source generates.
. dBA = A-weighted sound power level.
. Reference power : 1pW.
. Measured according to ISO 3741

Unit: dB(A)

Model	Power
AM017HN1DEH/EU	43
AM022FN1DEH/EU	45
AM022HN1DEH/EU	46
AM028FN1DEH/EU	48

1)AM017HN1DEH/EU

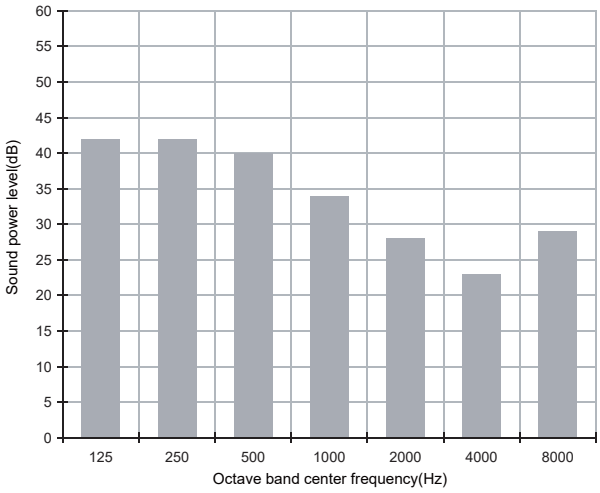

2)AM022FN1DEH/EU

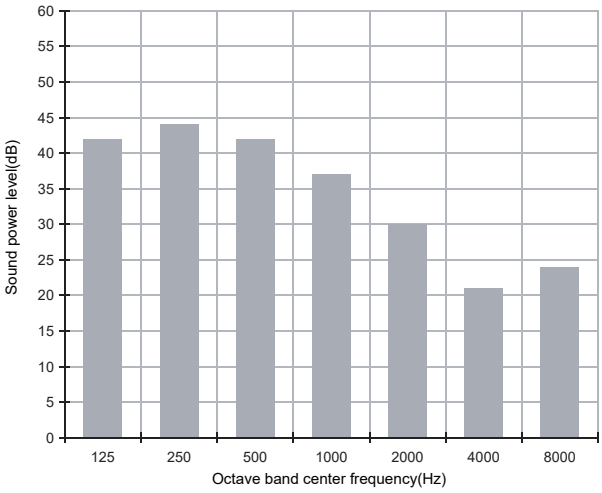

3)AM022HN1DEH/EU

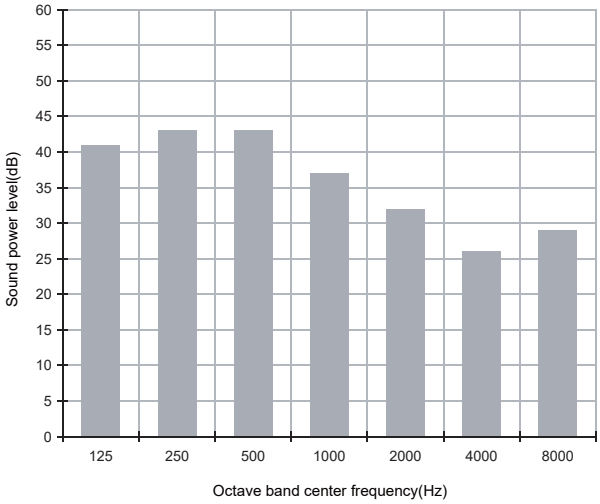

4)AM028FN1DEH/EU

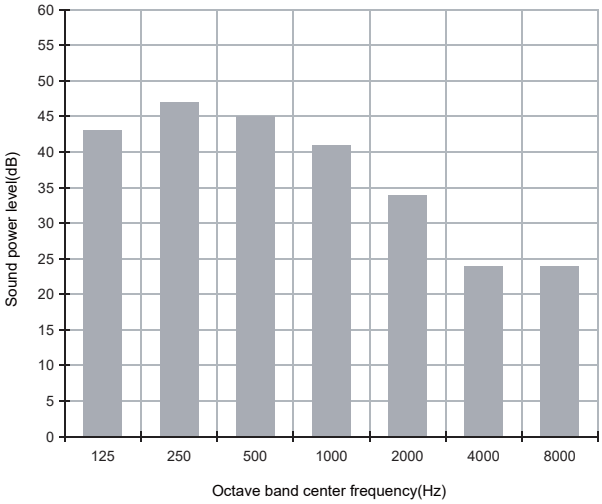

6 Sound power level

1Way Cassette

Note

. Specifications may be subject to change without prior notice.
. Sound power level is an absolute value that a sound source generates.
. dBA = A-weighted sound power level.
. Reference power : 1pW.
. Measured according to ISO 3741

Unit: dB(A)

Model	Power
AM036FN1DEH/EU	52
AM056JN1DEH/EU	58
AM071JN1DEH/EU	60

1)AM036FN1DEH/EU

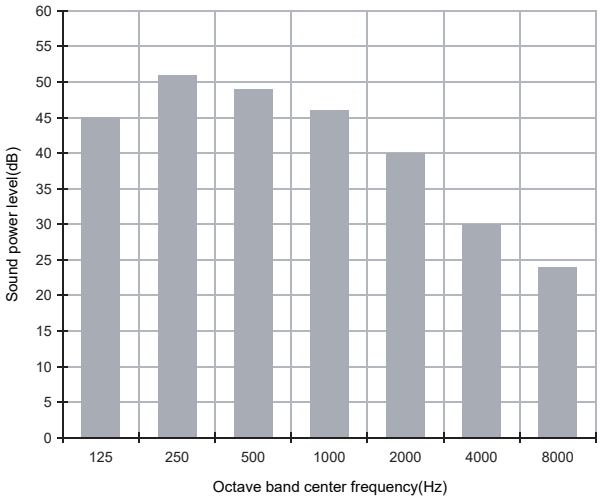

2)AM056JN1DEH/EU

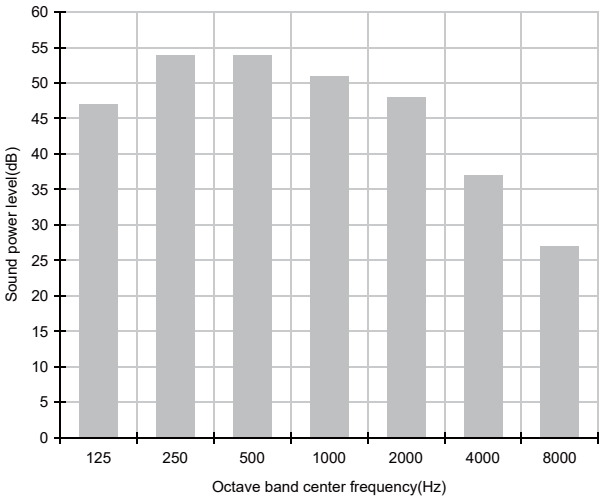

3)AM071JN1DEH/EU

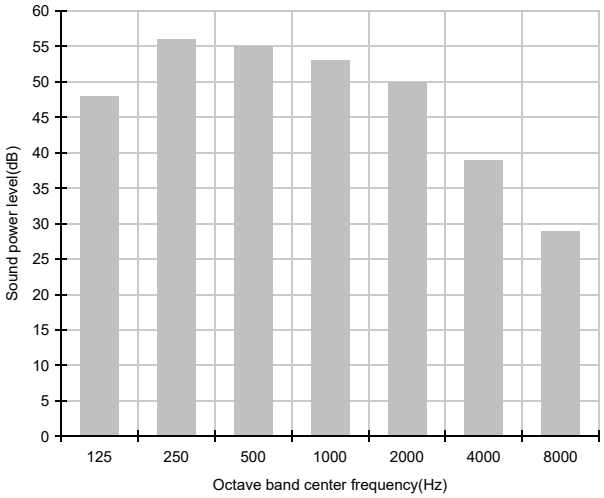

7 Temperature and air flow distribution

1 Way Cassette

AM036FN1DEH/EU

(1) Cooling air velocity distribution

Discharge angle : 60º

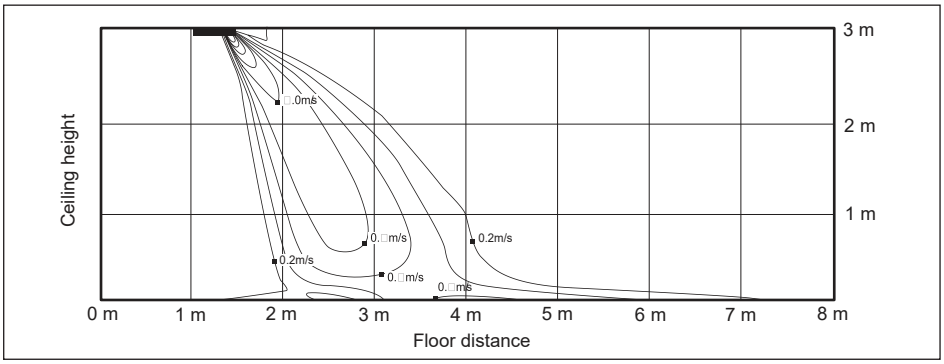

(2) Cooling temperature distribution

Discharge angle : 60º

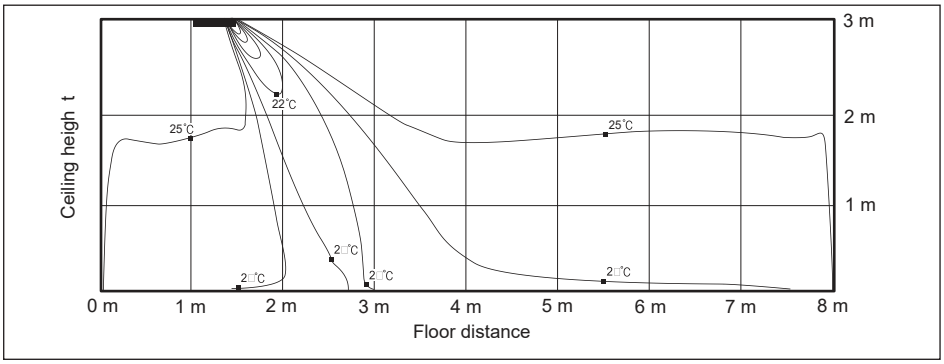

(3) Heating air velocity distribution

Discharge angle : 60º

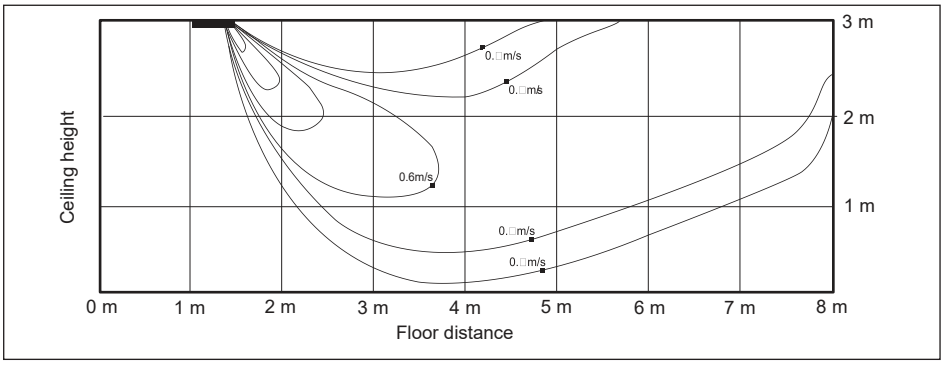

(4) Heating temperature distribution

Discharge angle : 60º

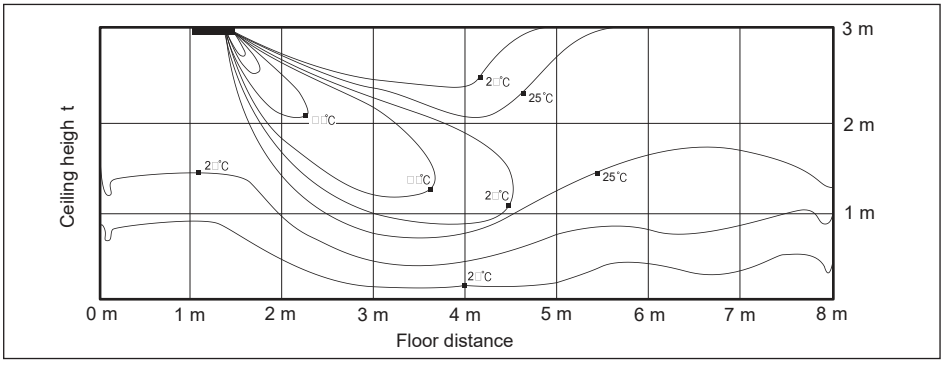

7 Temperature and air flow distribution

1 Way Cassette

AM056JN1DEH/EU

(1) Cooling air velocity distribution

Discharge angle : 50º

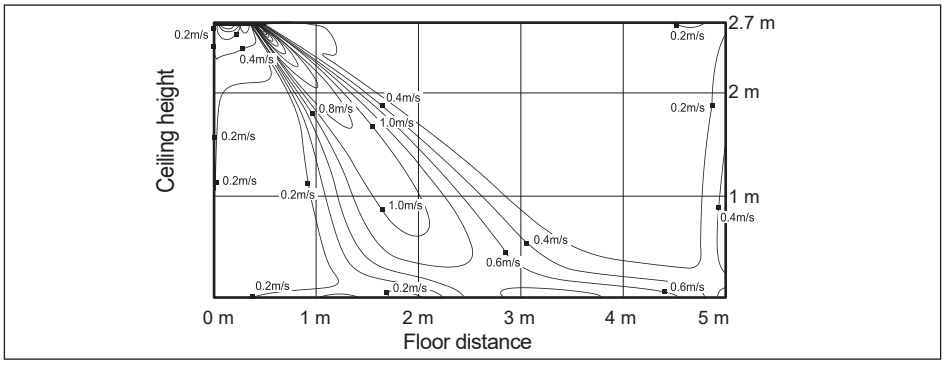

(2) Cooling temperature distribution

Discharge angle : 50º

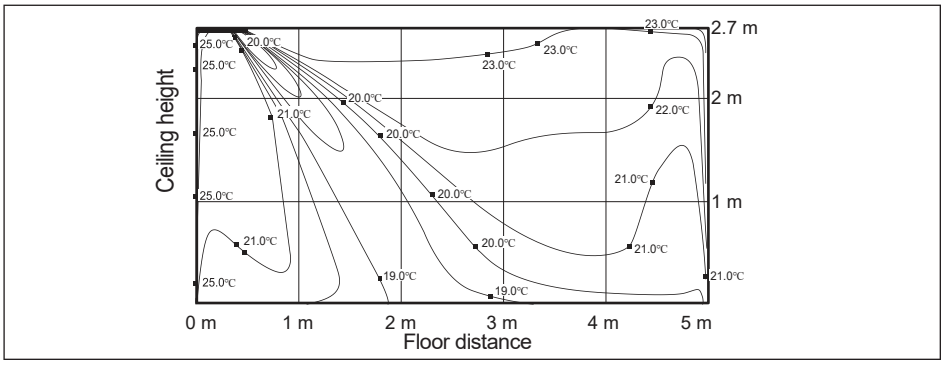

(3) Heating air velocity distribution

Discharge angle : 60º

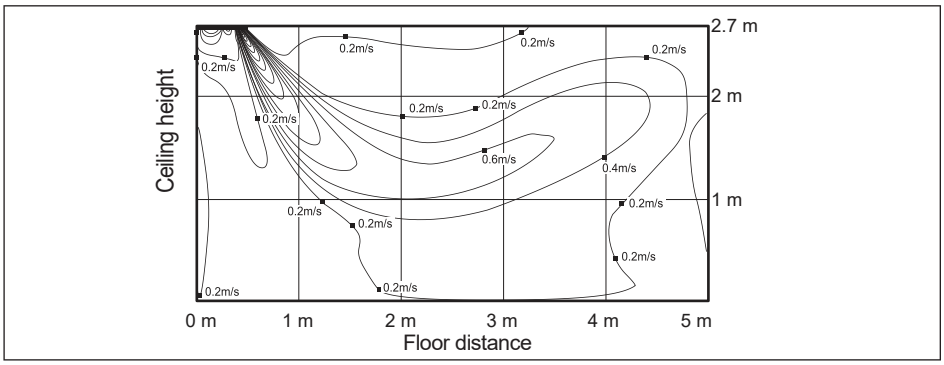

(4) Heating temperature distribution

Discharge angle : 60º

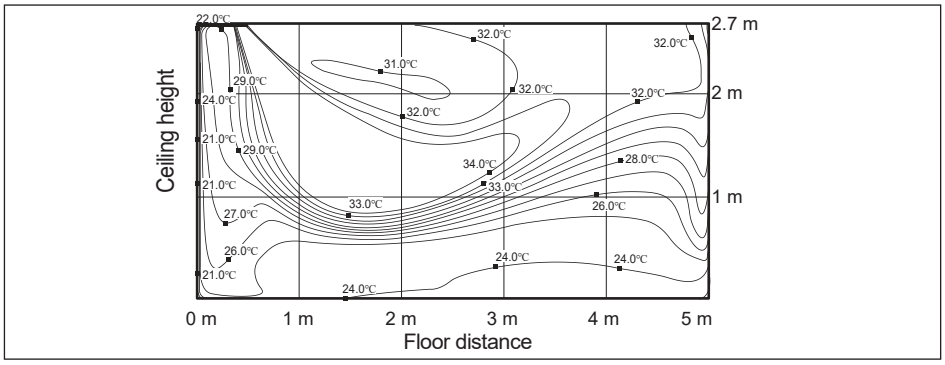

7 Temperature and air flow distribution

1 Way Cassette

AM071JN1DEH/EU

(1) Cooling air velocity distribution

Discharge angle : 50º

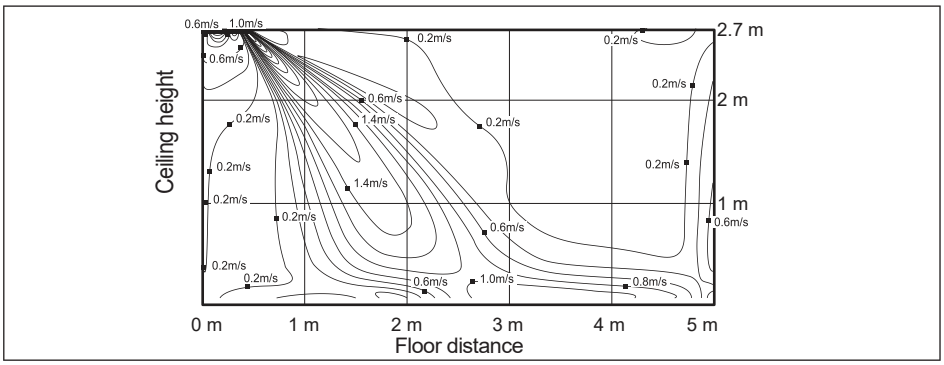

(2) Cooling temperature distribution

Discharge angle : 50º

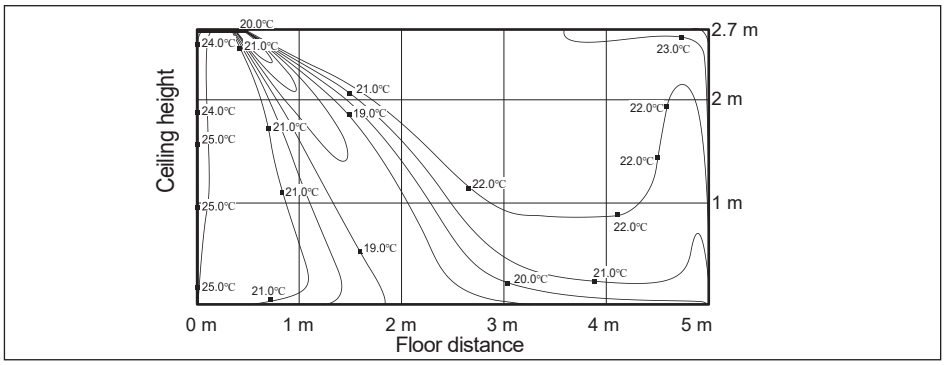

(3) Heating air velocity distribution

Discharge angle : 60º

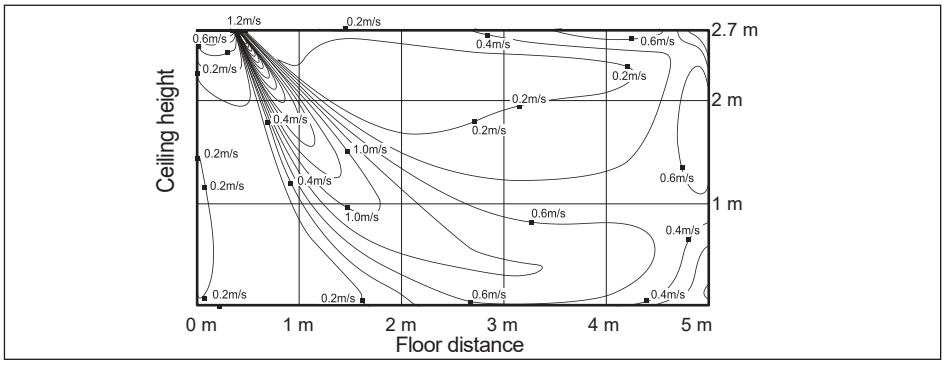

(4) Heating temperature distribution
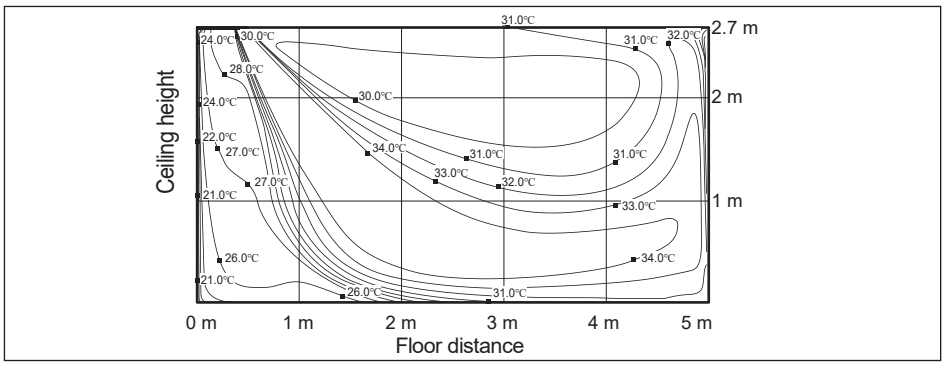
Discharge angle : 60º